Current part is item (2) on diagram. Available at www.oshkoshequipment.com

(1) Illustration		(2) Source, maint and recoverability code				(3)	(4)	(5)	(6)	(7) 15-day maint alw per 100 equip		(8)
(a) Fig. No.	(b) Item No.	(a) Materiel code	(b) Source	(c) Maintenance level	(d) Recoverability	Federal stock No.	Description	Unit of issue	Qty inc in unit	(a) Dir sup	(b) Gen sup	Depot maint guide per 100 equip
							11—REAR AXLE—Continued					
							1102—REAR AXLE DIFFERENTIAL AND RELATED PARTS (fig. 48)					
48	1	----	P	H	----	3110-100-0547	CUP, TAPERED ROLLER BEARING: mil-std-code 711-25523-1000 sr, 3.2650 od, 0.8730 w/case (706853).	ea	2			
48	2	----	P	H	----	3110-100-3539	CONE, TAPERED ROLLER BEARING: mil-std-code 711-25577-3000 includes rollers and cage, sr, 1.6880 bore, 1.0000 w/case (705440).	ea	2			
48	3	----	C	F	----	2520-737-1440	SHIM SET: case bearing (7371440)	ea	1			
							Composed of:					
	3.1	----	----	----	----	----	2 SHIM 0.003 (7372843)					
	3.2	----	----	----	----	----	2 SHIM 0.005 (7372844)					
	3.3	----	----	----	----	----	3 SHIM 00.010 (7372845)					
	3.4	----	----	----	----	----	3 SHIM 0.030 (7372846)					
48	4	----	C	H	----	2520-734-8607	PARTS KIT, DIFFERENTIAL: repair, bevel gear and drive pinion (7348607).	ea	1			
							Composed of:					
	4.1	----	----	----	----	----	1 GEAR AND PINION SET MATCHED (7032630)					
	4.2	----	----	----	----	----	5 PLATE, LOCK BEVEL GEAR SCREW (7032631)					
	4.3	----	----	----	----	----	10 SCREW, BEVEL GEAR (7372863)					
48	5	----	P	H	----	3110-227-3079	CONE, TAPERED, ROLLER BEARING: type ts, 1.375 bore, 1.125 w bevel pinion, inner (8329853).	ea	1			
48	6	----	P	H	----	3110-100-0571	CUP, TAPERED, ROLLER BEARING: mil-std-code 711-31520-1000 sr, 3.000 od, 0.9375 w/drive pinion, inner (706877).	ea	1			
48	7	----	C	F	----	2520-737-1439	SHIM SET: drive pinion bearing (7371439)	ea	1			
							Composed of:					
	7.1	----	----	----	----	----	2 SHIM, INNER 0.003 (7372847)					
	7.1	----	----	----	----	----	2 SHIM, INNER 0.005 (7372848)					
	7.1	----	----	----	----	----	1 SHIM, INNER 0.010 (7372849)					
	7.2	----	----	----	----	----	2 SHIM, OUTER 0.003 (7372850)					
	7.2	----	----	----	----	----	2 SHIM, OUTER 0.005 (7372851)					
	7.2	----	----	----	----	----	2 SHIM, OUTER 0.010 (7372852)					
	7.2	----	----	----	----	----	1 SHIM, OUTER 0.030 (7372853)					
48	8	----	P	H	----	3110-100-0634	CUP, TAPERED ROLLER BEARING: mil-std-code 719-02820-1000 sr, 2.8750 od, 0.6875 w/drive pinion, outer (707063).	ea	1			
48	9	----	P	H	----	3110-100-3690	CONE, TAPERED ROLLER BEARING: mil-std-code 719-02872-3000 includes rollers and cage, sr, 1.1250 bore, 0.8750 w/drive pinion, outer (705271).	ea	1			

Current part is item (2) on diagram. Available at www.oshkoshequipment.com

Current part is item (2) on diagram. Available at www.oshkoshequipment.com

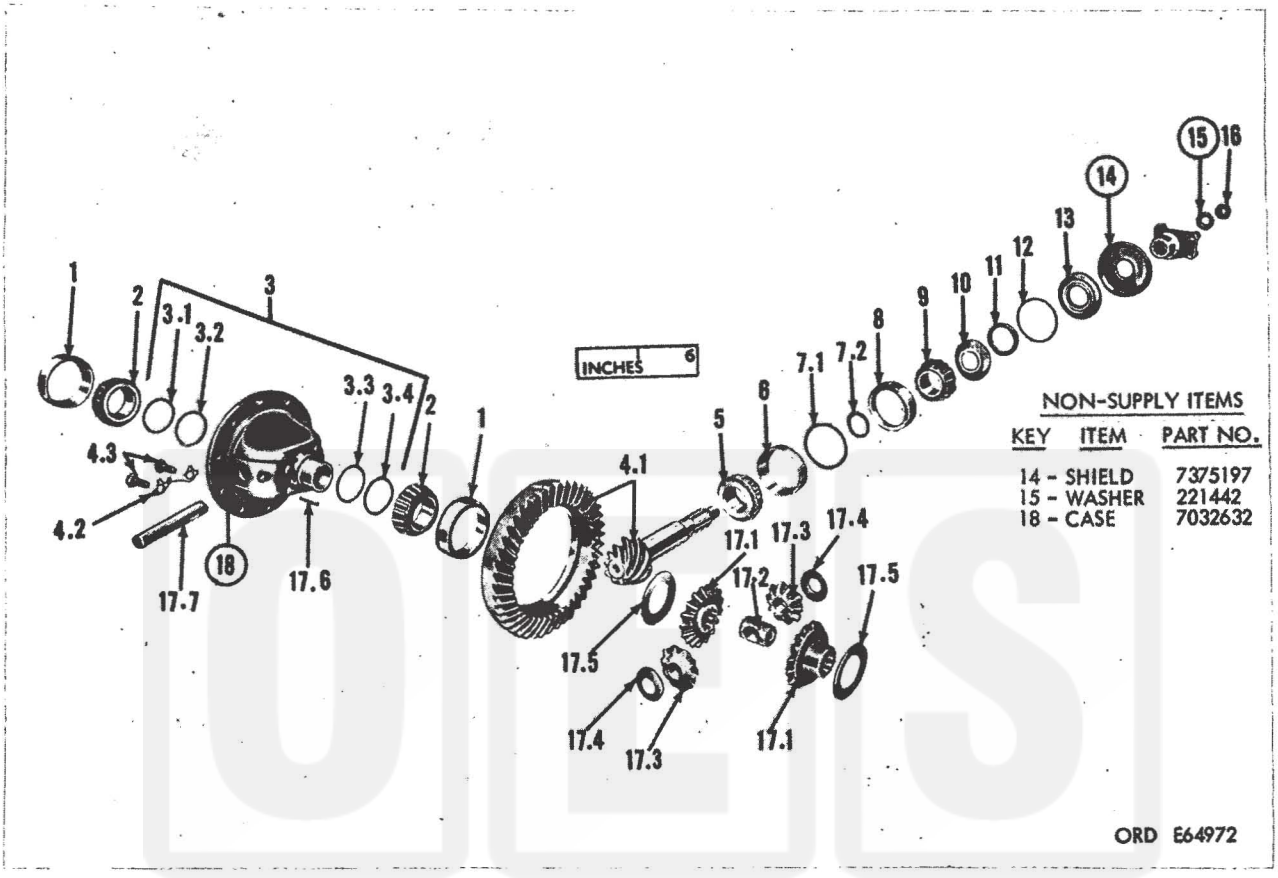

Figure 48. Rear axle differential and related parts—exploded view.

Current part is item (2) on diagram. Available at www.oshkoshequipment.com